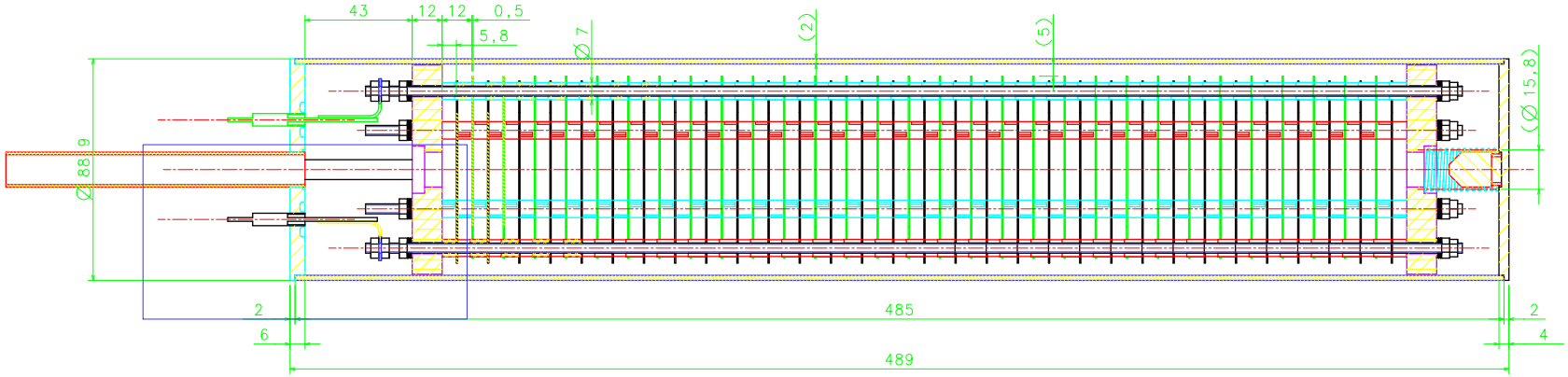

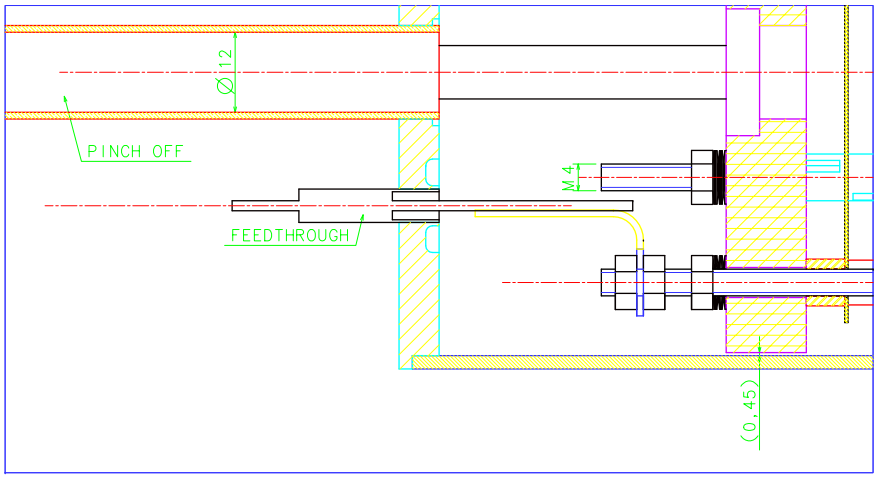

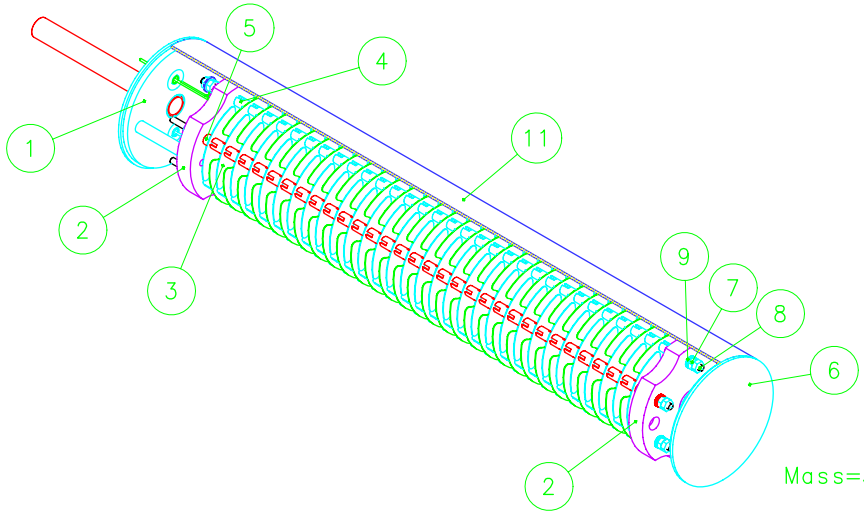

Mass=3.8kg

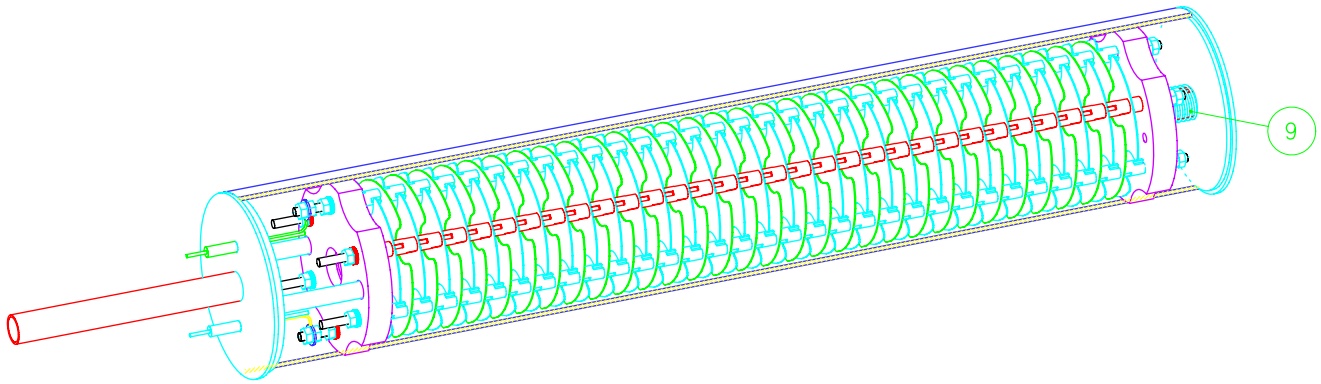

QUANT	DESCRIPTION	POS	MAT.	OBSERVATIONS	REF.CERN
1	ROUND TU. 304L WELD. 88,9x2,0	11			39.39.05
	TUBE ROND 304L SOUDE 88,9X2,0				088.2
1	COMPRESSION SPRING	10	1.4310	Ferroflex VD-180M-14	
60	SPRING WASHER Ø 8/4.2-0.2	9	1.4310	BOSSARD BN838	
6	IN.STEEL.THR.RODS A4 316 M 4	8			47.38.77
	TIGE FILET.AC.INOX A4 316 M 4				040.8
22	HEX.NUTS INOX A4 316 0,8D M4	7			47.43.77
	ECROU 6P.INOX A4 316 0,8D M4				040.1
1	BOTTOM COVER -	6		LHCBLM__0006-TYPE A	
	-				
6	SPACER	5			
183	OUTGASSED SPACERS -	4		LHCBLM__0007-TYPE A	
	-				
61	ELECTRODE -	3		LHCBLM__0004	
	-				
2	ALUMINE INSULATOR -	2		LHCBLM__0005	
	-				
1	COVER ASSEMBLY -	1		LHCBLM__0002-TYPE A	
	-				

ENS./ASS. S.ENS./S.ASS.

Beam Loss Monitor

ASSEMBLY

ECHELLE SCALE

DES/DRA.	G. FOFFANO	2004-02-05
CONTROLLED		
RELEASED		
APPROVED		

LHCB.BLM.....BEAMLOS000,B007,B0072005PL

REMPLACE/REPLACES

NON VALABLE POUR EXECUTION
NOT VALID FOR EXECUTION

QAC –

LHCBLM__0001

SIZE 1 IND.

IND.	DATE	NOM/NAME	ZONE	MODIFICATION

DESSIN, RUGOSITE, TOLERANCES SELON NORME ISO
DRAWING, RUGOSITY, TOLERANCES ACCORDING TO ISO STANDARD

PROJECTION

ORGANISATION EUROPEENNE POUR LA RECHERCHE NUCLEAIRE
EUROPEAN ORGANIZATION FOR NUCLEAR RESEARCH
GENEVE

Ce dessin ne peut etre utilise a des fins commerciales sans autorisation ecrite.
This drawing may not be used for commercial purposes without written authorisation.